PROJECT 32: Design and Analysis of Master Slave JK Flip-Flop by using Cadence Virtuoso

A Comprehensive Study of Analog Circuits

By: Priya Chaudhary, Astitva Johri and
Bhavya Solanki

Chapters:

List of Figures……..…… 3

1. Introduction …….. 4
2. Brief Description…… 5
3. Circuit Design……. 6-7
   3.1 Schematic Design……... 6
   3.2 Simulation Setup...…….. 6
   3.3 Transient Response……. 6
4. Simulation Results…….. 8
5. Advantages and Disadvantages…….. 9
   5.1 Advantages……. 9
   5.2 Disadvantages……. 9
6. Conclusion…….. 10
7. Frequently Asked Questions (FAQs)…….. 11

LIST OF FIGURES

Figure 3.1 Circuit of NAND Gate ……..……..…... 7

Figure 3.2 Circuit of Master Slave JK Flip-Flop ……..…..... 7

Figure 4.1 Simulation Result of Master Slave JK Flip-Flop... 8

1. INTRODUCTION

A Master-Slave JK Flip-Flop is a fundamental sequential circuit widely used in digital electronics. It addresses the race-around condition observed in a simple JK flip-flop by employing two clocked flip-flops in a cascaded configuration. The first stage, known as the master, captures the input data when the clock signal is high. The second stage, known as the slave, updates the final output when the clock signal transitions to low. This edge-triggered design ensures stable and predictable operation, making it suitable for various digital applications, including counters, registers, and memory storage.
The Master-Slave JK Flip-Flop is implemented using NAND gates by modifying a basic SR flip-flop with additional feedback paths. The circuit configuration prevents unwanted toggling and ensures that changes occur only at specific clock edges. The design and analysis of this flip-flop using Cadence Virtuoso provide insight into its real-world implementation and performance, highlighting its advantages and limitations.

Truth Table of Master Slave JK Flip-Flop :-

J	K	Clock (Edge)	Q (Next State)	Comment
0	0	↑	Q (No Change)	Hold State
0	1	↑	0	Reset
1	0	↑	1	Set
1	1	↑	Q' (Toggle)	Toggle State

2. BRIEF DESCRIPTION

A Master-Slave JK Flip-Flop consists of two JK flip-flops connected in cascade, controlled by complementary clock signals. It operates as follows:

- When the clock is high, the master latch is enabled and captures the input.
- When the clock transitions to low, the master latch is disabled, and the slave latch updates the final output.
- This avoids direct feedback and mitigates the race-around problem.

Logic Equations:

The behavior of a JK Flip-Flop is governed by:

- **J = 0, K = 0** → No change (Hold State)
- **J = 0, K = 1** → Reset (Q = 0)
- **J = 1, K = 0** → Set (Q = 1)
- **J = 1, K = 1** → Toggle (Q' = Q)

Implementation Using NAND Gates

A JK flip-flop can be constructed using NAND gates by modifying an SR flip-flop with additional feedback paths. The Master-Slave architecture is implemented by using two such JK flip-flops with opposite clock phases.

3. CIRCUIT DESIGN

3.1 Schematic Design

- Open Cadence Virtuoso and create a new schematic.
- Design the NAND gate using CMOS transistors.
- Construct the Master-Slave JK Flip-Flop using NAND gates by interconnecting them appropriately.
- Label all input, output, and clock signals for clarity.

3.2 Simulation Setup

- Create a testbench circuit including power supply and clock source.
- Define the J and K input signals using pulse generators.
- Set up the transient analysis with an appropriate time duration.
- Configure Spectre as the simulation engine for running the analysis.

3.3 Transient Response

- Run the transient simulation and observe the flip-flop's response to input changes.
- Verify that the output follows the expected transitions as per the truth table.
- Analyze timing parameters such as propagation delay and setup/hold time.
- Ensure there are no glitches or unwanted toggles in the output waveform.

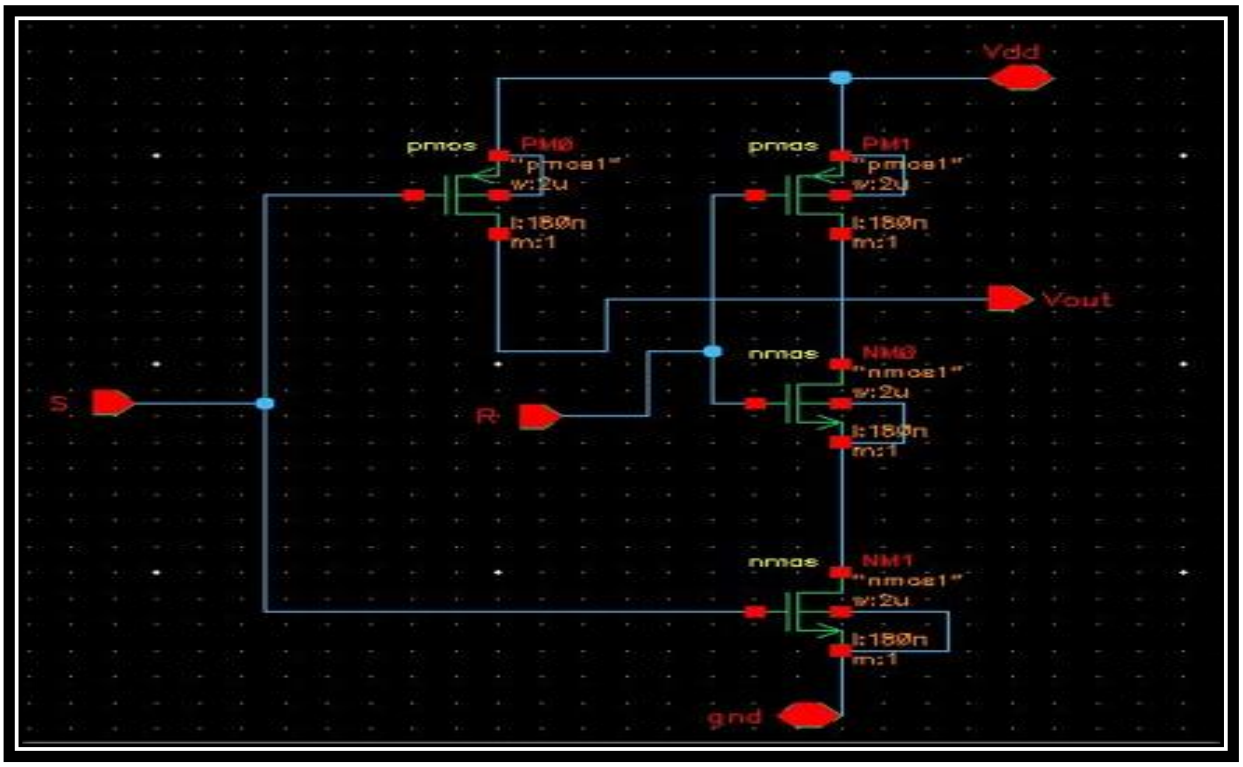

Figure 3.1 Circuit of NAND Gate

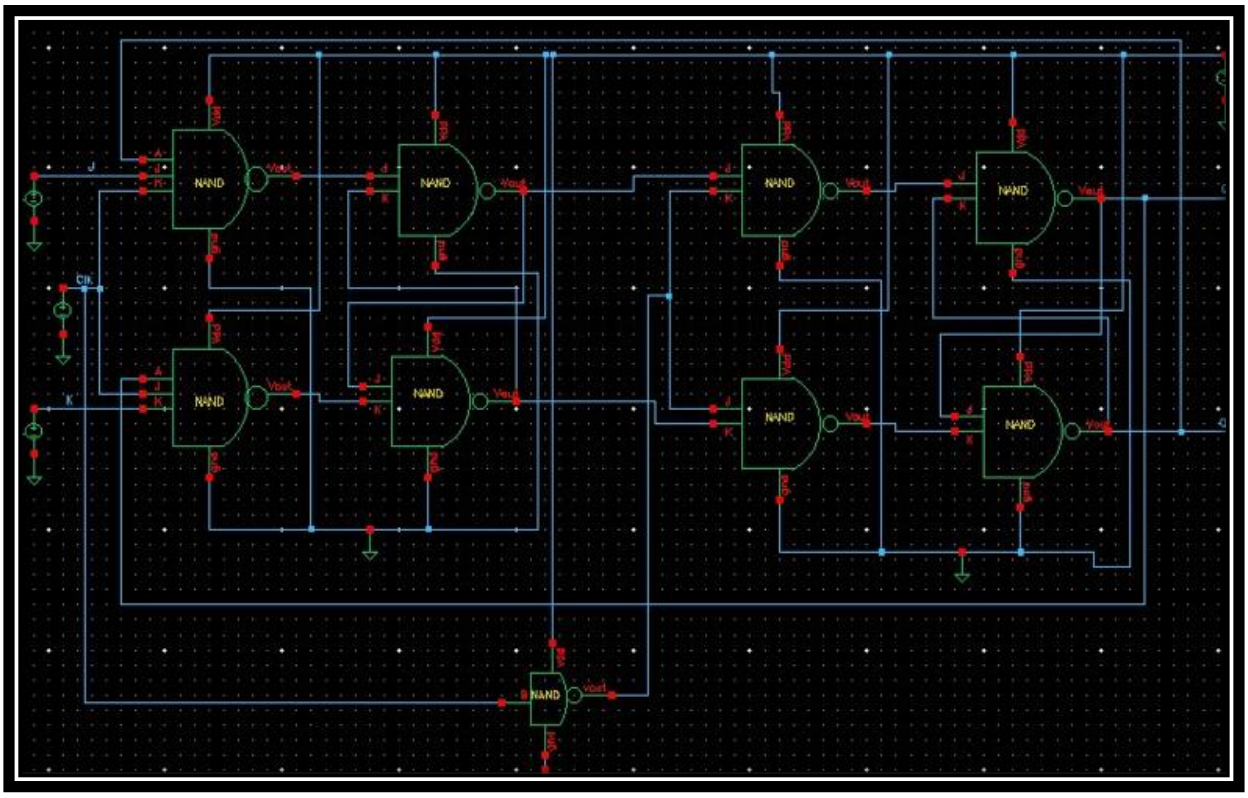

Figure 3.2 Circuit of Master Slave JK Flip-Flop

4. SIMULATION RESULTS

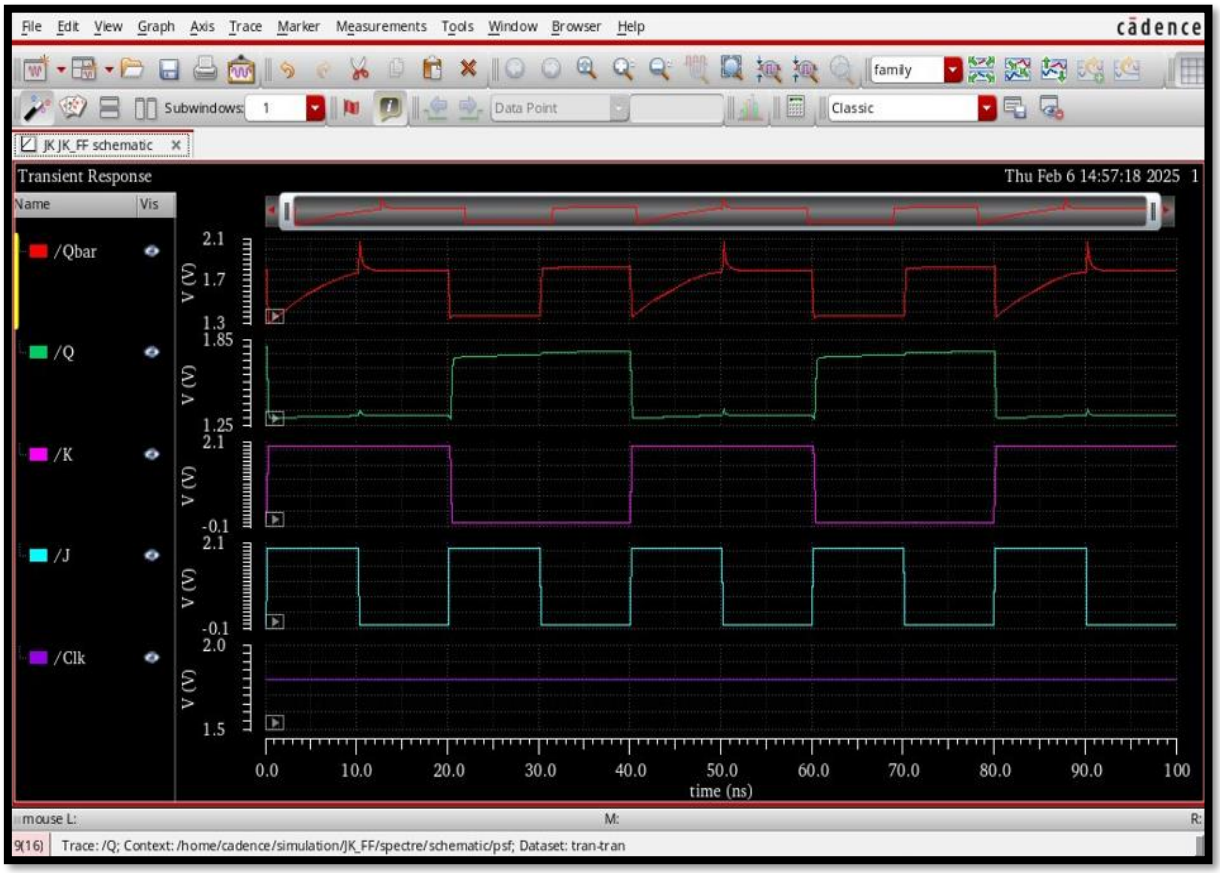

Figure 4.1: Simulation Results of Master Slave JK Flip-Flop

5. ADVANTAGES AND DISADVANTAGES

5.1 Advantages:-

1. **Prevents Race Condition:** Changes output only on the clock's falling edge.
2. **Better Timing Control:** Ensures stable sequential operation.
3. **Accurate Simulation:** Cadence Virtuoso provides precise analysis.
4. **Flexible Design:** Optimizable for power, speed, and area.
5. **Easy Integration:** Can be used in complex sequential circuits.

5.2 Disadvantages:-

1. **Higher Propagation Delay:** Due to the dual-latch design.
2. **More Power Consumption:** Uses more transistors.
3. **Complex Layout:** Requires careful design in Cadence Virtuoso.
4. **Larger Circuit Area:** Needs additional silicon space.
5. **Setup & Hold Time Issues:** Needs precise timing analysis.

6. CONCLUSION

The Master-Slave JK Flip-Flop designed using NAND gates in Cadence Virtuoso provides a reliable sequential logic component by eliminating race conditions and enabling controlled state transitions. By employing a two-stage design, it ensures stable operation and makes it suitable for use in synchronous digital systems.

The implementation process in Cadence Virtuoso allows engineers to visualize, simulate, and validate the circuit's behavior under real-world conditions. Through schematic design, testbench setup, and transient analysis, the flip-flop’s performance can be evaluated comprehensively. Despite its slightly higher complexity and power consumption compared to simpler flip-flops, its ability to maintain accurate data storage and prevent unintended state transitions makes it a preferred choice in digital circuit design.

Mastering the design and analysis of this flip-flop equips engineers with essential skills for developing more advanced digital systems, ensuring efficient and robust circuit performance in practical applications.

7. FREQUENTLY ASKED QUESTIONS (FAQs)

Q1. Why is the Master-Slave JK Flip-Flop preferred over a simple JK Flip-Flop?

Answer: The Master-Slave JK Flip-Flop prevents the race-around condition by using two cascaded flip-flops, ensuring controlled operation.

Q2. How does the clock signal affect the operation of a Master-Slave JK Flip-Flop?

Answer: The master captures the input on the rising edge, and the slave updates the output on the falling edge, making it edge-sensitive.

Q3. What are the key design considerations for implementing JK Flip-Flops in Cadence Virtuoso?

Answer: Proper transistor sizing, ensuring correct clocking, avoiding glitches, and verifying circuit behavior using transient analysis.

Q4. Can the Master-Slave JK Flip-Flop be implemented with NOR gates instead of NAND gates?

Answer: Yes, but NAND gate implementation is preferred in CMOS design due to its efficiency and better performance.

Q5. What simulation results are expected in Cadence Virtuoso?

Answer: The expected output should show correct state transitions based on J and K inputs, confirming the proper functionality of the flip-flop.